Allergenco-D® & Allergenco-D Posi-Track®

Disposable Air Sampling Cassettes

The Allergenco-D® brand sampling cassettes were developed for the sampling and collection of aeroallergens and bioaerosols for quantitative analysis of mold spores, pollen, skin fragments, insects, combustion particles, toners, environmental dusts, construction dusts and other airborne particulates. Both Allergenco-D® style cassettes employ a patented laminar flow venturi; which provides a higher readable collection efficiency, as well as, a more well defined impaction trace helping to reduce analysis time. The Allergenco-D®'s are designed to operate at a standard flow rate of 15 lpm on traditional high volume vacuum pumps.

Recently, Environmental Monitoring Systems (EMS) provided the new Allergenco-D® to Sergey Grinshpun, Ph.D., Professor, Kettering Laboratories, Center for Health-Related Aerosol Studies, Department of Environmental Health, University of Cincinnati for evaluation under carefully controlled laboratory conditions as well as in field studies.

Professor Grinshpun reported the following preliminary results:

1)"Indeed, our lab tests demonstrated that the cut-off size for the new Allergenco ® impactor designs falls approx. between 1.6 and 2 um. The collection efficiency increases to 80-100% as the particle size reaches ~3 um. This seems sufficient to collect >>50% of fungal species, even smaller ones.

2)The overall capture efficiency (d50 ~ 1.7um) of the Allergenco-d® cassette was close to its actual collection efficiency, suggesting that the losses were relatively low.

3)Our lab data obtained with the Allergenco-d cassette, challenged with Cladosporium cladosporiodes, Aspergillus versicolor, and Penicillium melinii, revealed that it has higher actual collection efficiency compared to the Air-O-Cell®. The difference depends on the spore size and may exceed a factor of 2. This effect is more pronounced for smaller particles. The field tests performed with the Allergenco-d (cassette), Allergenco ®-box, and the Air-O-Cell® cassette operating in parallel at three sites confirmed the lab findings. The field samples had a broad variety of fungal species. {The Allergenco-D® has a higher actual collection efficiency compared to other slit impaction cassettes on the market today.}

4)The deposition area (trace) on the new Allergenco's impaction slide appeared to be narrower than that of the Air-O-Cell®. {The Allergenco-D trace also exhibits a very uniform slit deposit distribution.}

5)For each cassette, the Allergenco-d® …, the spore counts {were}conducted by the three methods – entire area (100%), partial-A (40 randomly chosen microscopic fields), and partial-B (20 traverses) – gave essentially the same results. This suggests that the partial count can be successfully implemented for both configurations."

These data and results with additional test information have been published.

Article citation: Sergey A. Grinshpun, J. Environ. Monit., 2007, DOI: 10.1039/b702743e

A small change in the design of a slit bioaerosol impactor significantly improves its collection characteristics

Sergey A. Grinshpun, Atin Adhikari, Seung-Hyun Cho, Ki-Youn Kim, Taekhee Lee and Tiina Reponen

While several methods are available for bioaerosol monitoring, impaction remains the most common one, particularly for collecting fungal spores. Earlier studies have shown that the collection efficiency of many conventional single-stage bioaerosol impactors falls below 50% for spores with an aerodynamic diameter between 1.7 and 2.5 μm because their cut-off size is 2.5 μm or greater. The cut-off size reduction is primarily done by substantially increasing the sampling flow rate or decreasing the impaction jet size, W, to a fraction of a millimetre, with both measures often impractical to implement. Some success has recently been reported on the utilization of an ultra-low jet-to-plate distance, S (S/W < 0.1), in circular impactors. This paper describes a laboratory evaluation and some field testing of two single-stage, single-nozzle, slit bioaerosol impactors, Allergenco-D and Air-O-Cell, which feature the same jet dimensions and flow rate but have some design configuration differences that were initially thought to be of low significance. The collection efficiency and the spore deposit characteristics were determined in the laboratory using real-time aerosol spectrometry and different microscopic enumeration methods as the test impactors were challenged with the non-biological polydisperse NaCl aerosol and the aerosolized fungal spores of Cladosporium cladosporioides, Aspergillus versicolor, and Penicillium melinii. The tests showed that a relatively small reduction in the jet-to-plate distance of a single-stage, single-nozzle impactor with a tapered inlet nozzle, combined with adding a straight section of sufficient length, can significantly decrease the cut-off size to the level that is sufficient to efficiently collect spores of all fungal species. Furthermore, it appears that the slit jet design may improve the application of partial spore counting methodologies with respect to those applied to circular deposits. Data from a demonstration field study, conducted with the two samplers in environments containing a variety of fungal species, supported the laboratory findings.

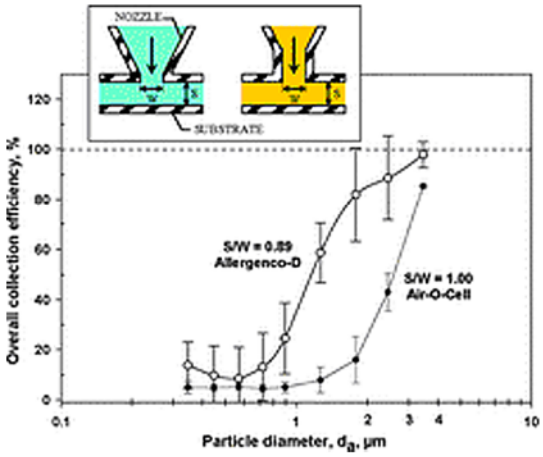

The Allergenco ® brand continues to lead the industry in innovation and quality, providing consistent and reproducible collection of airborne particles for Indoor Air Quality investigations. The improved collection efficiency and more narrow trace provide more representative data over a wider range of conditions for IAQ professionals.

Please contact me to request a copy of the full peer reviewed article or to discuss this new technology.

Sincerely,

James R. Tucker, Ph.D.

COO & VP Technology

Environmental Monitoring Systems

A small change in the design of a slit bioaerosol impactor significantly improves its collection characteristics

Sergey A. Grinshpun,* Atin Adhikari, Seung-Hyun Cho, Ki-Youn Kim, Taekhee Lee and Tiina Reponen

Received 21st February 2007, Accepted 17th May 2007
First published as an Advance Article on the web 4th June 2007
DOI: 10.1039/b702743e

While several methods are available for bioaerosol monitoring, impaction remains the most common one, particularly for collecting fungal spores. Earlier studies have shown that the collection efficiency of many conventional single-stage bioaerosol impactors falls below 50% for spores with an aerodynamic diameter between 1.7 and 2.5 μm because their cut-off size is 2.5 μm or greater. The cut-off size reduction is primarily done by substantially increasing the sampling flow rate or decreasing the impaction jet size, W, to a fraction of a millimetre, with both measures often impractical to implement. Some success has recently been reported on the utilization of an ultra-low jet-to-plate distance, S ($S/W < 0.1$), in circular impactors. This paper describes a laboratory evaluation and some field testing of two single-stage, single-nozzle, slit bioaerosol impactors, Allergenco-D and Air-O-Cell, which feature the same jet dimensions and flow rate but have some design configuration differences that were initially thought to be of low significance. The collection efficiency and the spore deposit characteristics were determined in the laboratory using real-time aerosol spectrometry and different microscopic enumeration methods as the test impactors were challenged with the non-biological polydisperse NaCl aerosol and the aerosolized fungal spores of *Cladosporium cladosporioides*, *Aspergillus versicolor*, and *Penicillium melinii*. The tests showed that a relatively small reduction in the jet-to-plate distance of a single-stage, single-nozzle impactor with a tapered inlet nozzle, combined with adding a straight section of sufficient length, can significantly decrease the cut-off size to the level that is sufficient to efficiently collect spores of all fungal species. Furthermore, it appears that the slit jet design may improve the application of partial spore counting methodologies with respect to those applied to circular deposits. Data from a demonstration field study, conducted with the two samplers in environments containing a variety of fungal species, supported the laboratory findings.

1. Introduction

Bioaerosol monitoring is increasingly used to assess occupational, residential, and ambient exposures to airborne pathogens and allergens. In most situations, the bioaerosol is characterized by collecting a representative sample on a substrate for subsequent analyses.[1] While several principles are presently utilized for bioaerosol sampling,[2] impaction appears to be the most commonly used for collecting bacteria and fungi, especially if maintaining their viability is not critical (*e.g.*, for total microbial enumeration). For instance, the airborne spores are usually counted under a microscope after collecting them on a slide of a single-stage impactor, such as the Burkard Personal Volumetric Air Sampler (Burkard Manufacturing Company Ltd, Hertfordshire, UK), Air-O-Cell sampling cassette (Zefon Analytical Instruments, Inc., St. Petersburg, FL, USA), CyClex BioAerosol Impact Sampler, and Micro5 Microcell (Environmental Monitoring Systems, Inc., Charleston, SC, USA), to mention a few.

Center for Health-Related Aerosol Studies, Department of Environmental Health, University of Cincinnati, Cincinnati, Ohio, 45267-0056, USA. E-mail: Sergey.Grinshpun@uc.edu; Fax: +1-513-558-2263; Tel: +1-513-558-0504

Available impactors used for bioaerosol sampling have either circular or rectangular (slit) inlets. Most of them are single-stage collectors. Some impactors have a single nozzle as an inlet, *e.g.*, Air-O-Cell, while others have as many as 400 nozzles, *e.g.*, MAS-100 (EDM Chemicals, Inc., Gibbstown, NJ, USA) or Andersen 1-STG (Thermo Fisher Scientific, Inc., Waltham, MA, USA), or more.[3] More importantly, they vastly differ from one another with respect to their performance characteristics including, but not limited to: (i) the ability to efficiently collect biological particles of specific sizes and (ii) the uniformity of the particle deposit on a substrate, which is often critical for applying conventional microbial enumeration protocols. The first one is characterized by the cut-off size, d_{50}, defined as the particle aerodynamic diameter, d_a, for which the collection efficiency of this impactor is equal to 50%. For a single-stage, single-nozzle rectangular impactor (Fig. 1), d_{50} depends on the air flow velocity, U_0, through the nozzle and the slit width, W, as

$$d_{50} = \sqrt{\frac{9\eta W Stk_{50}}{\rho_p U_0 C_c}} \quad (1)$$

where ρ_p is the particle density, C_c is the Cunningham correction factor ($\sim$1 for particles larger than 1 μm), η is the air

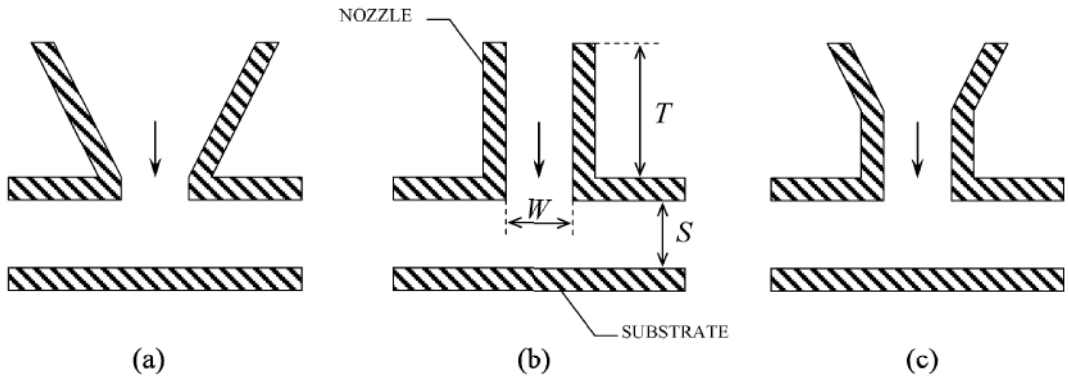

Fig. 1 Different design configurations of impactor inlets.

viscosity, and Stk_{50} is a special characteristic of the impactor introduced by Marple[4] as the Stokes number for the collection efficiency of 50%. The air velocity U_0 is proportional to the sampling flow rate, Q,

$$U_0 = \frac{Q}{WZ} \tag{2}$$

where Z is the slit length. The particle movement in the impaction zone is generally affected not only by the flow-rate-based U_0-value presented in eqn (2), but also by the profile of the air velocity. The latter depends on the configuration of the impactor nozzle (throat), which may be conical (Fig. 1a) or straight (Fig. 1b) or represent a combination of the two (Fig. 1c). The length of the nozzle, T, may also play a role and, according to Marple and Willeke,[5] $T \geq W$ is considered appropriate. A pure conical (venture-like) inlet with sharp corners—the design utilized, *e.g.*, in the Air-O-Cell—is less preferable because of undesirable turbulence created in the impaction zone. A straight inlet generally allows for the development of a homogeneous air velocity profile and helps to focus the air jet toward the impaction plate. However, the most favorable flow conditions are provided by the combination of the venture section and the straight channel shown in Fig. 1c. The latter section should be sufficiently long because a very short straight nozzle may not allow sufficient time for the particles to accelerate to the air velocity, which alters the impactor efficiency.

A conventional single-stage slit impactor is designed based on two criteria.[4–8] First, the non-dimensional jet-to-plate distance, S/W, should be larger than 1.5, and second, the Reynolds number,

$$Re = \frac{2\rho_{air} W U_0}{\eta} \tag{3}$$

of the air flow in the nozzle throat should be between 500 and 3000. Here, ρ_{air} is the air density. The above criterion ensures the desirable sharp collection efficiency curve with the cut-off size, which is not sensitive to a small variability of the jet-to-plate distance. In addition, the spatial uniformity of the particle deposit on the collection substrate is improved if the limiting conditions for S/W and Re are met. The latter may be preferable in a situation when the microscopic count is performed not on the entire deposit area but only on a part of it (the partial slide reading). Generally, the sharpness of the impactor's collection efficiency curve is important as it allows differentiating the particles of $d_a < d_{50}$ from those with $d_a > d_{50}$. However, if an impactor is designed to collect particles of a specific nature (*e.g.*, spores, which are distinct from other particles when being counted under the microscope), the main requirement is that the particles of interest be collected efficiently, *i.e.*, their sizes must fall above d_{50}, irrespective of the curve's sharpness at $d_a < d_{50}$.[9]

The Air-O-Cell sampler operating at its standard flow rate of 15 l min^{-1} provides $d_{50} \approx 2.3$–2.5 μm,[2,10,11] which—given its rather sharp collection efficiency curve—leaves very little room for collecting bioaerosol particles below 1.5–2 μm,[11] *e.g.*, *Cladosporium cladosporioides* with $d_a \approx 1.8$ μm.[12] In our earlier study,[9] we demonstrated that much lower (as compared to 2.5 μm) cut-off sizes can be achieved at the expense of the sharpness of the efficiency curve at $d_a < d_{50}$ by reducing the non-dimensional jet-to-plate distance down to $S/W < 0.1$, *i.e.*, over an order of magnitude below the level recommended by the Marple design criteria. Circular spore impactors, namely CyClex BioAerosol Impact Sampler, Cyclex-d Cassette, and Micro5 Microcell, which have recently become available from the Environmental Monitoring Systems, Inc., are designed with ultra-low jet-to-plate distances ($S/W \ll 1$) and, while not providing very sharp differentiation around the cut-off size, they efficiently collect nearly all fungal species and even many spore-forming bacterial species (which are smaller than fungal spores) because their cut-off size is below 1 μm. The question arises, however, whether it is necessary to make the jet-to-plate distance as low as 10- to 30-fold smaller than the size of the impactor nozzle. A very small jet-to-plate distance creates an excessive shear force in the impaction zone, thus enhancing deagglomeration and bounce of spores and causing non-uniformity of the particle surface density on the collection substrate. Besides, the above impactors utilized the "conical" inlet (Fig. 1a) (if one neglects a very small 1 mm long linear transition in the end). This design has the potential for improvement by extending the straight section (Fig. 1c) so that the homogeneous air flow profile is developed and the turbulence in the impaction zone is reduced.

In this study we hypothesized that a relatively small reduction in the jet-to-plate distance of a single-stage, single-nozzle impactor with a tapered inlet nozzle, combined with adding a straight section of sufficient length, can significantly decrease d_{50} to the level that is sufficient, at least to efficiently collect

fungal spores (which have an aerodynamic diameter of 1.7–1.8 μm or greater). While it appears that random field and slice partial counting methodologies are adequate for circular deposit impactors investigated in our previous study,[9] these issues are easier to address if the deposit has a rectangular shape. Thus, this paper describes the laboratory evaluation and some field testing of the performance of two single-stage, single-nozzle, slit impactors with the same jet dimensions ($W \times Z$) and operating at the same flow rate, but having the following major differences: throat design (tapered nozzle *versus* that followed by a relatively long straight section) and jet-to-plate distances (slight change from $S/W = 1.0$ and 0.89).

Materials and methods

Laboratory testing

Experimental set up. The experimental facility utilized in this study has been used in our previous research on bioaerosol sampling and is described in our earlier publications.[9–11] Fig. 2 presenting the experimental set-up is adopted from Grinshpun *et al.*[9] Each of the challenge aerosols was diluted with HEPA filtered compressed air and directed through a 10 mCi ^{85}Kr electrostatic charge equilibrator (model 3012, TSI Inc., St. Paul, MN, USA) to an aerosol chamber (approximately 145 mm in diameter and 250 mm high), which housed the tested impactor. Aerosol concentrations upstream of the impactor, C_{UP}, and downstream of it, C_{DOWN}, were measured using a size-selective optical particle counter, OPC (model 1.108, Grimm Technologies, Inc., Douglasville, GA, USA), operated at a flow rate of 1.2 l min^{-1}. The aerosol concentrations were measured selectively by particle size within the optical range of 0.3 to 20 μm and recorded in 15 channels with a time resolution of 6 s. The particle size distribution was also measured by an aerodynamic particle size spectrometer (Aerosizer, TSI Inc., Amherst Process Instruments, Hadley, MA, USA) operated at a flow rate of 5.1 l min^{-1}. Thus, a relationship between the optical and aerodynamic particle diameters was established.

The entire set-up was located in a class II biosafety cabinet (model 6TX, BSL-II, Baker Co., Inc., Sanford, ME, USA).

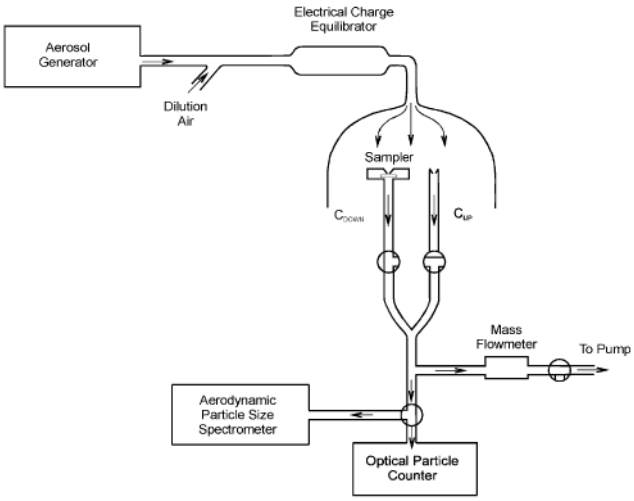

Fig. 2 Experimental setup (adopted from Grinshpun *et al.*).[9]

The temperature was maintained at 23 ± 2 °C and the relative humidity at 35 to 55% throughout the experiments.

Challenge aerosols. The performance characteristics of the impactors were studied with NaCl particles and spores of three fungal species: *Cladosporium cladosporioides* (ATCC 58991; ellipsoidal, 3–7 μm × 2–4 μm physical dimensions; d_a = 1.8 μm, σ_g = 1.1), *Aspergillus versicolor* (RTI Culture #367, obtained from the Research Triangle Institute, NC, USA, courtesy of Dr E. Cole; spherical, 2–3.5 μm physical diameter; d_a = 2.5 μm, σ_g = 1.1), and *Penicillium melinii* (isolated from a moldy building; spherical, 5–6 μm physical diameter; d_a = 3.0 μm, σ_g = 1.1). The above species, which are common in indoor and outdoor environments, have been characterized with respect to their physical and aerodynamic sizes in our earlier study.[12]

All tested fungal species were cultured on malt extract agar (Beckton Dickinson Microbiology Systems, Sparks, MD, USA). The cultures were incubated prior to the experiment at 27 ± 2 °C for 7–14 days, which is generally sufficient for mature sporulation.[13] The spores were harvested as described by Schmechel *et al.*[14] Briefly, two grams of sterile glass beads (0.45–0.50 mm in diameter, B. Braun Biotech International, Melsungen, Germany) were dispersed on the fungal colonies in each Petri plate inside a class II, type B2, biosafety cabinet (Sterilchem GARD, Baker Co., Sanford, ME, USA), and the plates were gently shaken. The beads were then carefully collected from all plates into a 50 ml sterile tube, and 20 ml sterile filtered deionized water was added. The solution was mixed well for two minutes using a vortex touch mixer (model 231, Fischer Scientific Co., Pittsburgh, PA, USA). The glass beads sedimented and the spores remained in the liquid. The spore suspension was decanted into another 50 ml tube and the purity of spore suspension (no hyphal components) was examined using 400× microscopic magnification (Labophot 2, Nikon Corp., Japan). The stock suspension was then serially diluted to reach the concentration level of 10^7–10^8 spores ml^{-1} in sterile filtered deionized water. The concentration was confirmed using a 0.1 mm deep hemacytometer (Hausser Scientific Co., Horshum, PA, USA).

Both the spore and NaCl suspensions were aerosolized using a six-hole Collison nebulizer (BGI, Inc., Waltham, MA, USA) at a flow rate of 6 l min^{-1}, mixed with a HEPA-filtered dry air flow of 30 l min^{-1}, and passed through a 10 mCi ^{85}Kr electrostatic charge neutralizer (model 3054, TSI, Inc., Minneapolis, MN, USA) into the experimental chamber.

Test impactors. In this study, we tested two single-stage, single-nozzle, slit bioaerosol impactors—the Air-O-Cell and Allergenco-D disposable sampling cassettes (supplied by the Environmental Monitoring Systems, Inc.). The impactors operate at the same nominal sampling flow rate of 15 l min^{-1} and have the same jet dimensions of $W \times Z$ = 1.0 mm × 14.4 mm, through which the aerosol is directed toward an adhesive coated glass substrate (aimed at preventing particle bounce). The same adhesive is used on the substrates of both impactors. The jet-to-plate distances are 1.0 mm for the Air-O-Cell (S/W = 1.0) and 0.89 mm for the Allergenco-D (S/W = 0.89). The Air-O-Cell inlet is a tapered two-dimensional slit

with an external width of 11 mm (sampling orifice) and an internal width of 1 mm. The inlet of Allergenco-D consists of a tapered two-dimensional slit with external and internal widths of 12.75 and 1 mm, respectively, followed by a 4 mm long straight section.

Determination of the collection efficiency. The performance of an aerosol sampler collecting airborne microorganisms depends on its inlet characteristics and the collection efficiency.[15,16] Based on the analysis of the aspiration errors and wall losses of both impactors,[17] we concluded that these are negligibly small for particles of $d_a \leq 10$ μm. Using the particle size concentrations measured upstream and downstream of the impactor by the Grimm OPC, the overall collection efficiency (or capture efficiency), E_C, for each impactor was determined for a specific optical particle size as follows:

$$E_C = \left(1 - \frac{C_{DOWN}}{C_{UP}}\right) \times 100\% \quad (4)$$

The optical particle size scale was converted to the aerodynamic scale through the comparison of the optical and aerodynamic size distributions (measured by the Grimm OPC and the Aerosizer operating in parallel).[9,10] According to Gregory,[18] a density of 1.1 g cm^{-3} was set for the fungal spores.

Prior to each OPC measurement, a 1 min interval was allowed to reach the aerosol concentration equilibrium. The sampling time, t, during which the concentrations (C_{UP} or C_{DOWN}) were measured with the OPC, was 2 min for each replicate and the overall collection efficiency was integrated over this time period. When testing with NaCl particles each experiment was repeated three times, while for fungal spores we conducted eight replicates because of the greater variability of the spore concentrations.

Once the E_C was determined for spores using the real-time aerosol counting with the OPC, the slides were analyzed using a microscope with phase-contrast objectives (Labophot 2, Nikon Corp., Tokyo, Japan) at a magnification of 400×. The total number of spores, $N_{MICROSCOPE}$, collected on the slide deposition area, A_{DEP}, was counted. To determine the actual collection efficiency of the tested impactor, $N_{MICROSCOPE}$ was related to the number recorded by the OPC upstream of the impactor over the time t:

$$E_{ACTUAL} = \frac{N_{MICROSCOPE}}{C_{UP} Q t} \times 100\% \quad (5)$$

The real-time aerosol measurement devices (both the Grimm OPC and the Aerosizer) identify a spore propagule as one particle while E_{ACTUAL} was based on the single spore count, *i.e.*, all spores in an agglomerate were counted as separate units. In some cases, this can lead to E_{ACTUAL} exceeding 100%. E_{ACTUAL} is perceived as a performance characteristic of the bioaerosol sampler complimentary to E_C, which is affected by internal losses and deagglomeration of spores as a result of impaction. The microscopic counting protocol may also affect $N_{MICROSCOPE}$. Unlike in some other laboratory studies, in these tests very few spores were aggregated upstream of the impactor (due to the method used for preparing the spore suspension and their aerosolization from the Collison nebulizer). Therefore, we did not anticipate that E_{ACTUAL} would considerably exceed 100% in any of the laboratory measurements.

Even though the spore size distributions were rather narrow when measured with the Aerosizer (with σ_g as low as 1.1), there was an uncertainty about specific OPC channels to be selected for the bioaerosol concentration measurement of each of the three fungal species. We chose to consider two options: more conservative, which was represented by a narrower particle size range designated for a specific species (fewer OPC channels involved); and less conservative in which the designated range was wider (*i.e.*, additional channel(s) were included). In both cases, the same approach was applied for C_{UP} and C_{DOWN} so that the consistency of determination of the overall and actual collection efficiencies was not compromised, but each efficiency for each species was represented by two numbers referred to as the lower and upper limits: $E_{C\text{-lower}}$ and $E_{C\text{-upper}}$, and $E_{ACTUAL\text{-lower}}$ and $E_{ACTUAL\text{-upper}}$.

Microscopic enumeration methodologies. The spore enumeration on the slide was conducted after mounting it with the lactophenol cotton blue stain (Beckton Dickinson Microbiology Systems) using a 25 mm^2 cover glass. The edges of the cover glass were sealed by transparent nail enamel. This staining allowed differentiating unpigmented hyaline spores. In addition, phase contrast objectives were used to improve the contrast whenever necessary. The spore enumeration was performed using the above-specified microscope and a high-resolution digital image analysis system (SPOT RT Diagnostic Instruments, Fryer Company, Cincinnati, OH, USA). If the spores were transected by the outer edges of the reticule, we enumerated only those with more than 50% of their projected area within the reticule.

Three microscopic enumeration methodologies were used, and the results were compared for each impactor. One methodology was based on the count performed on the entire deposit area (impaction trace). Others represented two partial count methodologies: (i) on 40 randomly chosen microscopic fields and (ii) on 20 traverses across the entire width of the trace. In practice, the entire slide is infrequently counted because it is too time-consuming. Instead, the spores are enumerated on a certain number of microscopic fields (at least 40 fields or 400 particles are usually recommended). Then the average number of spores per field is multiplied by the ratio of the entire deposit area (A_{DEP}) to the microscopic field area (A_{FIELD}). The traverse method was utilized by performing the traverses perpendicular to the deposit strip using the x–y controls. Analysis was performed only on complete traverses (no partial traverses were analyzed). The number of traverses (20) was chosen to have examined a minimum of 20% of the sample trace at this magnification used for the microscopic analysis. The three microscopic counts were compared for a specific impactor and fungi using the analysis of variance (ANOVA). The statistical significance from this test was indicated as a p_1-value. In addition, the counts performed by the same method for a specific species were compared for the pairs of samples collected with the Allergenco-D and Air-O-Cell by using the paired t-test, and the statistical significance was indicated as a p_2-value; p-values of <0.05 were considered significant.

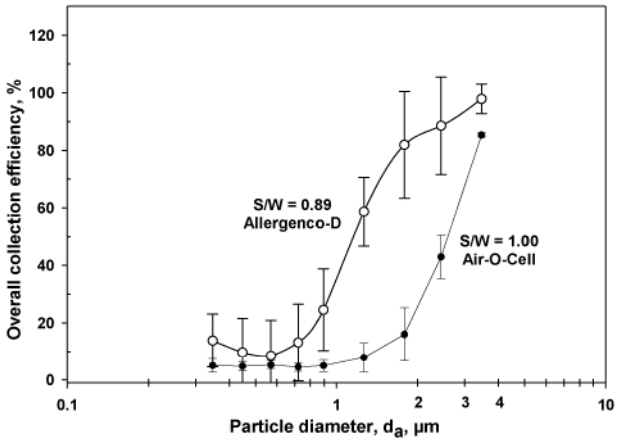

Fig. 3 The overall collection efficiency as a function of the aerodynamic particle size obtained for the Allergenco-D and Air-O-Cell challenged with NaCl particles.

Field testing

Following the laboratory evaluation, both impactors were field-tested while operating side by side at different sites located in suburban Cincinnati, Ohio, USA (Tests 1, 2, and 3). The field tests were performed during a peak ambient fungal season (September–October, 2005). Three identical Air-O-Cell impactors and three identical Allergenco-D impactors sampled in parallel for 10 min in each test. The total spore count and the genus/group-specific counts within 6 fungal spore types (conducted on the entire deposit area) were determined for each aerosol sample. The mean and the standard deviation were determined with respect to the total count for each set of the three simultaneously operated identical samplers, and the results were compared for the two impactors using the *t*-test.

Results and discussion

Fig. 3 presents the overall collection efficiency as a function of the particle size obtained for the two impactors challenged with NaCl particles. The *x*-axis indicates the aerodynamic diameter (converted from the optical size measured by the Grimm OPC using the Aerosizer data). The cut-off size for the Air-O-Cell was 2.3–2.5, whereas it was 1.7–1.8 μm for the Allergenco-D, *i.e.*, a decrease by a factor of approximately 1.5 was observed experimentally. The classic impaction theory (which has a limited utilization to both impactors because (i) $S/W < 1$ in the Allergenco-D and (ii) the straight section is absent in the Air-O-Cell) fails to predict such a decrease, suggesting the same d_{50}-value of approximately 2.4 μm for both impactors ($Re \approx 2300$). At the same time, the computational fluid dynamics method is able to predict a sizable reduction of d_{50} resulting from a relatively small decrease in the jet-to-plate distance ($S/W < 1$).[19]

The experimental data allow us to conclude that a relatively small change in the design, namely a reduction of the jet-to-plate distance (from $1 \times W$ in the Air-O-Cell to $0.89 \times W$ in the Allergenco-D), combined with the addition of a straight section $4 \times W$ long, results in a noticeable shift of the collection efficiency curve toward lower particle sizes.

The actual collection efficiencies and the overall collection efficiencies for the spores of three fungal species are listed in Table 1. Reflecting the differences in the OPC data handling, E_{ACTUAL} of *C. cladosporioides* ranged from 43% ($E_{\mathrm{ACTUAL\text{-}lower}}$) to 77% ($E_{\mathrm{ACTUAL\text{-}upper}}$) for the Allergenco-D but only from 15% to 31% for the Air-O-Cell. The difference between the actual collection efficiencies of the two impactors were smaller for *A. versicolor* (62–123% *versus* 31–51%) and further decreased for *P. melinii* (49–93% *versus* 33–64%). The overall collection efficiency data demonstrated similar trends. As communicated in our previous studies,[9–11] E_{C} differs from E_{ACTUAL} due to deagglomeration of spore aggregates, bounce, and internal wall losses. The microscopic counting protocol also plays a role. However, it is seen that the differences were not sizable, suggesting that the above issues were not very influential. The data presented in the last column of Table 1 demonstrates that the impactor with lower jet-to-plate distance collected more spores by a factor of 2.96 ± 0.48 for *C. cladosporioides* (the smallest size), 2.12 ± 0.25 for *A. versicolor* (intermediate), and 1.44 ± 0.04 for *P. melinii* (the largest).

Table 2 shows the results of microscopic enumeration obtained following the three above-described counting methodologies. For each fungal species, no statistically significant effect of the counting method on the spore count was observed. For example, the concentration of *C. cladosporioides* obtained from the Allergenco-D samples and enumerated by the 100% area count as well as the two partial area counts (40 microscopic fields and 20 traverses) were close to each other: $23\,018 \pm 2611$ spores m^{-3}, $21\,652 \pm 2592$ spores m^{-3}, and $18\,141 \pm 2140$ spores m^{-3}, respectively. According to the ANOVA test, a p_1-value of 0.331 suggests the lack of a statistically significant difference among these sample counts associated with the counting methodology. A similar conclusion was made with respect to other fungal species for both impactors (all p_1-values in Table 2 are above 0.05). This finding leaves an investigator with more than one option for microscopic analysis of samples collected for both impactors. It seems worth mentioning that the same conclusion may not

Table 1 The actual and overall collection efficiencies of Allergenco-D and Air-O-Cell for the spores of three different fungal species

	Collection efficiency range (%)				
	$S/W = 0.89$ (Allergenco-D)		$S/W = 1.0$ (Air-O-Cell)		Ratio, $\frac{N_{\mathrm{MICROSCOPE\,(Allergenco\text{-}D)}}}{N_{\mathrm{MICROSCOPE\,(Air\text{-}O\text{-}Cell)}}}$
Fungal species	E_{ACTUAL} [a]	E_{C} [b]	E_{ACTUAL} [a]	E_{C} [b]	
C. cladosporioides (d_a = 1.8 μm)	43 to 77	53 to 67	15 to 31	11 to 24	2.96 ± 0.48
A. versicolor (d_a = 2.5 μm)	62 to 123	90 to 99	31 to 51	36 to 74	2.12 ± 0.25
P. melinii (d_a = 3.0 μm)	49 to 93	96 to 100	33 to 64	73 to 78	1.44 ± 0.04

[a] Range from $E_{\mathrm{ACTUAL\text{-}lower}}$ to $E_{\mathrm{ACTUAL\text{-}upper}}$. [b] Range from $E_{\mathrm{C\text{-}lower}}$ to $E_{\mathrm{C\text{-}upper}}$.

Table 2 Airborne concentrations of fungal spores measured on the slides of Allergenco-D and Air-O-Cell cassettes based on spore microscopic enumeration on the entire area of deposition (100% count), as well as the partial counts on 40 randomly chosen microscopic fields and 20 traverses (400× magnification, average of $n = 3$ replicates). Comparison among three microscopic enumeration techniques and two sampling methods; p_1 = p-values representing the difference among three analysis methods (ANOVA test) p_2 = p-values (one-tail) representing the differences between two sampling methods; Allergenco-D *versus* Air-O-Cell (t-test)

Fungal species	Spore counting methods	Allergenco-D/spores m^{-3}	p_1	Air-O-Cell/spores m^{-3}	p_1	p_2
C. cladosporioides	Entire deposit area	23 018 ± 2611	0.331	9609 ± 1926	0.109	0.001[b]
	40 microscopic fields	21 652 ± 5592		12 138 ± 2345		0.027[a]
	20 traverses	18 141 ± 2140		14 161 ± 2254		0.045[a]
A. versicolor	Entire deposit area	14 612 ± 2580	0.534	8641 ± 660	0.195	0.008[b]
	40 microscopic fields	12 841 ± 1031		10 006 ± 2049		0.049[a]
	20 traverses	14 612 ± 2406		12 152 ± 2885		0.159
P. melinii	Entire deposit area	21 324 ± 1816	0.081	14 095 ± 1946	0.471	0.005[b]
	40 microscopic fields	15 907 ± 2481		15 165 ± 3731		0.394
	20 traverses	17 636 ± 2846		17 077 ± 2513		0.406

[a] $p < 0.05$. [b] $p < 0.01$.

necessarily hold true for ultra-small jet-to-plate distances ($S/W \ll 1$), due to the particle deposit non-uniformity that may be caused by excessive shear forces in the impaction area.

It is rather interesting to observe that the mean counts on the entire deposit area are always higher than the partial count data for the Allergenco-D and lower for the Air-O-Cell. As indicated above, this effect is not significant ($p_1 > 0.05$), and therefore should not be over-interpreted.

The last column of Table 2 presents p_2-values from the t-test comparing the counts obtained using the two impactors. In most cases, $p_2 < 0.05$ and in some $p_2 < 0.01$, suggesting significant difference between the two sampling methods. This is clearly represented by the *C. cladosporioides* data: $d_a \approx d_{50(\text{Allergenco-D})}$ but $< d_{50(\text{Air-O-Cell})}$. Although with a lower significance level, the samples of *A. versicolor* also demonstrate that the higher mean concentration was obtained with Allergenco-D: $d_a > d_{50(\text{Allergenco-D})}$ and $\approx d_{50(\text{Air-O-Cell})}$. The p_2-values listed for *P. melinii* are somewhat confusing. We expected that these spores were large enough so that the difference associated with the sampling method would be consistently of low significance if at all seen. The 40-field random counts and the 20-traverse counts indeed confirm this expectation ($p_2 > 0.05$); however, the entire deposit area counts of *P. melinii* samples collected by the two impactors appear statistically different. Perhaps, the results of the latter tests were more influenced by the spore bounce that affected the deposit patterns, and hence the microscopic counts performed on the entire deposit area. Even if statistically significant, the actual difference between the mean values of the *P. melinii* concentrations determined from the entire area counts was lower than for the two smaller spores.

The traverse partial counting method allowed catching 22–27% of the entire deposit area for the Allergenco-D and 20–22% for the Air-O-Cell, which is about the same. The 40-field random count covered about 20–34% of the A_{DEP} of Allergenco-D but only 15–17% for the Air-O-Cell.

Table 3 presents the measurement data on the deposit area for the three species and two impactors (note that since the length of the close-to-rectangular deposits were approximately the same, the differences in the area reflect solely different widths of the deposits). The paired t-tests show that in the Air-O-Cell, the impacted spores create a greater trace than in the Allergenco-D, and this is statistically significant ($p < 0.05$). The difference can be attributed to the jet-to-plate distance and addition of a straight section of the throat because all other governing parameters of the impactors are the same. Indeed, if the space S between the nozzle outlet and the collection surface is smaller (like in the Allergenco-D), it is more challenging for a particle to make a sharp turn in the impaction zone; thus, the particle deposition in this case occurs in a smaller area. This is supported by the fact that the deposit area of the Allergenco-D sample decreases with increasing spore size (inertia). Additionally, a relatively long straight jet of the Allergenco-D is likely to provide a narrower impaction trace than a more turbulent jet of the Air-O-Cell. With the above said, it is still intriguing that the deposit areas and their dependence on the particle size appear so different for the two impactors with such small differences in design. To some extent, the spore deagglomeration and bounce during impaction may help explain the differences associated with the fungal species. The original percentage of airborne spore aggregates and their impaction-caused deaggregation and bounce are species-specific.[9,11] The deaggregation and bounce effect on the deposit area is likely to be more pronounced for lower jet-to-plate distances.

Both samplers exhibited similar levels of spore deposit uniformity with a slightly lower variability observed on the Allergenco-D slides. When counting spores on the 40 randomly selected microscopic fields, the coefficient of variation

Table 3 Comparison of the deposit areas on the slides of Allergenco-D and Air-O-Cell cassettes for the spores of three different fungal species

	Deposit area/mm^2		
Fungal species	Allergenco-D	Air-O-Cell	p-value
C. cladosporioides	29.26 ± 1.49	37.93 ± 1.79	0.0029[a]
A. versicolor	22.14 ± 2.17	34.11 ± 1.81	0.0018[a]
P. melinii	17.29 ± 0.93	40.66 ± 2.14	<0.0001[a]

[a] $p < 0.01$.

Table 4 Comparison between the spore concentrations obtained with two sampling methods in three ambient environments (data from microscopic enumerations of total fungal spores on the entire slide deposit area)

	Allergenco-D		Air-O-Cell		
Test	Spore concentration/spores m^{-3}	CV (%) $n = 3$	Spore concentration/spores m^{-3}	CV (%) $n = 3$	p-value
Test 1	17 723 ± 2003	11.3	10 998 ± 1227	9.0	0.0077[a]
Test 2	6823 ± 882	12.9	3885 ± 638	16.4	0.0095[a]
Test 3	3811 ± 1591	41.7	3187 ± 1889	59.3	0.6842

[a] $p < 0.01$.

representing the non-uniformity of spore surface density ranged from about 20% for *P. melinii* to about 40% for *C. cladosporioides*.

Overall, the data presented in Tables 1, 2 and 3 show that the increase in collection efficiency achieved by a small change of the slit impactor design occurred not at the expense of the deposit pattern or the data consistency. This allows the use of different microscopic counting methodologies—partial and entire area counts—for the bioaerosol analysis of samples.

As the final phase of the study, a demonstration field experiment was conducted in environments represented by a variety of fungal species. Table 4 presents the total spore concentrations obtained using the Allergenco-D and Air-O-Cell impactors. The bioaerosol field monitoring results confirmed the laboratory findings that the impactor with lower S/W collects spores more efficiently. However, only Tests 1 and 2 showed that this difference is statistically significant (paired t-test, $p < 0.05$), while the results of Test 3 appear to lack statistical significance. The coefficient of variation, CV, calculated as a ratio of the standard deviation to the mean spore concentration for each case, appears to be relatively low for the first two field tests (≈9–11% in Test 1 and ≈13–16%, in Test 2), but was about 4-fold greater in Test 3 (≈ 42% for the Allergenco-D and ≈ 59% for the Air-O-Cell). Thus, the failure to detect a statistically significant difference between the field performances of the two samplers in Test 3 (unlike Tests 1 and 2) can be attributed to high data variability observed at the third site. The speciation data revealed that smaller spores, represented primarily by species of *Aspergillus* and *Penicillium* (approximately 2–5 μm), were predominant (> 50% of the total), which helps explain the differences between field samples collected with the Allergenco-D and the Air-O-Cell, since the former is more efficient for smaller particle sizes. Effects such as the spore deagglomeration during impaction and bounce make the comparison of the environmental samples obtained with two different impactors more complex and call for additional information for data interpretation.

Conclusions

This study revealed that a relatively small change in the bioaerosol impactor design (often regarded as of minor importance) results in a significant improvement of its collection characteristics, decreasing the cut-off size to the extent that the spores of practically all fungal species are efficiently collected on the substrate. With respect to microscopic analysis, the spore enumeration data obtained using the three tested counting methodologies—the entire impaction trace count, 40-field partial count, and 20-traverse partial count—are statistically the same.

Acknowledgements

This study was partially supported by the Korea Research Foundation (post-doctoral fellowship for Dr Ki-Youn Kim) and by the Environmental Monitoring Systems Inc. The authors appreciate this support. Technical assistance provided by Mr. Takeshi Honda and Dr James R. Tucker during the preparation of this manuscript is also appreciated.

Disclaimer

Reference to any companies or specific commercial products does not constitute or imply their endorsement, recommendation or favoring by the authors or the University of Cincinnati.

References

1 *Bioaerosols Handbook*, ed. C. S. Cox and C. M. Wathes, Lewis Publishers, Boca Raton, Florida, 1995.
2 T. Reponen, K. Willeke, S. Grinshpun and A. Nevalainen, in *Aerosol Measurement: Principles, Techniques and Applications*, ed. P. A. Baron and K. Willeke, Wiley Interscience, New York, 2nd edn, 2001, ch. 24, pp. 751–778.
3 M. Yao and G. Mainelis, *Aerosol Sci. Technol.*, 2006, **40**, 595–606.
4 V.A. Marple, A fundamental study of inertial impactors, , PhD thesis, University of Minnesota, Minneapolis, MN, 1970.
5 V. A. Marple and K. Willeke, *Atmos. Environ.*, 1976, **12**, 891–896.
6 V. A. Marple and B. Y. H. Liu, *Environ. Sci. Technol.*, 1974, **8**, 648–654.
7 V. A. Marple and K. Willeke, in *Fine Particles*, ed. B. Y. H. Liu, Academic Press, New York, pp. 411–466.
8 D. J. Rader and V. A. Marple, *Aerosol Sci. Technol.*, 1985, **4**, 141–156.
9 S. A. Grinshpun, G. Mainelis, M. Trunov, R. L. Górny, S. K. Sivasubramani, A. Adhikari and T. Reponen, *J. Aerosol Sci.*, 2005, **36**, 575–591.
10 V. Aizenberg, T. Reponen, S. A. Grinshpun and K. Willeke, *Am. Ind. Hyg. Assoc. J.*, 2000, **61**, 855–864.
11 M. Trunov, S. Trakumas, K. Willeke, S. A. Grinshpun and T. Reponen, *Aerosol Sci. Technol.*, 2001, **34**, 490–498.
12 T. Reponen, S. A. Grinshpun, K. L. Conwell, J. Wiest and M. Anderson, *Grana*, 2001, **40**, 119–125.
13 *Bioaerosols*, ed. H. A. Burge, Lewis Publishers, Boca Raton, Florida, 1995, pp. 13, 14, 19, 96.
14 D. Schmechel, R. L. Gorny, J. P. Simpson, T. Reponen, S. A. Grinshpun and D. M. Lewis, *J. Immunol. Methods*, 2003, **283**, 235–245.
15 A. Nevalainen, J. Pastuszka, F. Liebhaber and K. Willeke, *Atmos. Environ.*, 1992, **26A**, 531–540.
16 S. A. Grinshpun, C. W. Chang, A. Nevalainen and K. Willeke, *J. Aerosol Sci.*, 1994, **25**, 1503–1522.
17 (*a*) S. A. Grinshpun, K. Willeke and S. Kalatoor, *Atmos. Environ.*, 1993, **27A**, 1459–1470; (*b*) S. A. Grinshpun, K. Willeke and S. Kalatoor, *Corrigendum*, 1993, **28A**, 375.
18 P. H. Gregory, *The Microbiology of Atmosphere*, Leonard Hill, Aylesbury, Buckinghamshire, UK, 1973, p. 16.
19 W. Whyte, G. Green and A. Albisu, *J. Aerosol Sci.*, 2007, **38**, 101–114.